Kepler: A search for habitable planets.

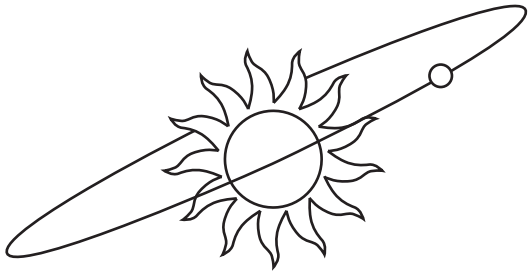

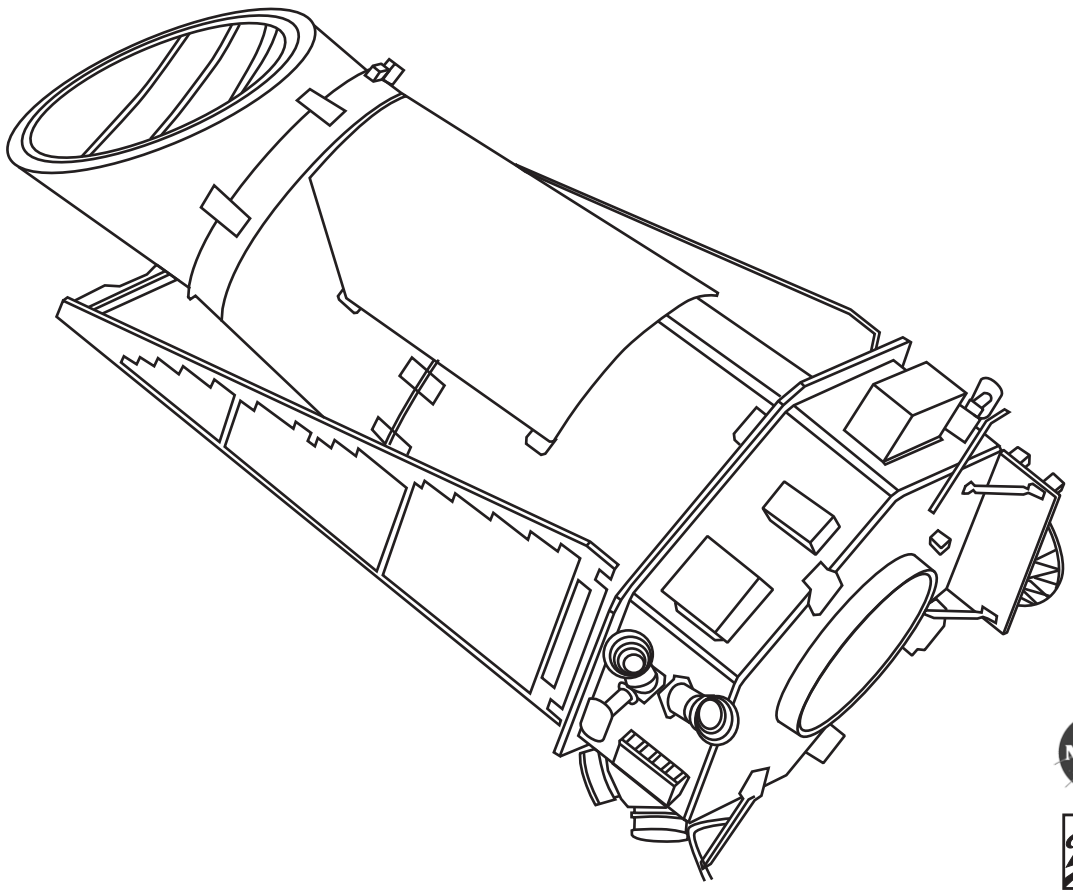

National Aeronautics and Space Administration

Ball Aerospace & Technologies Corp.

www.kepler.nasa.gov
www.ballaerospace.com

D1784